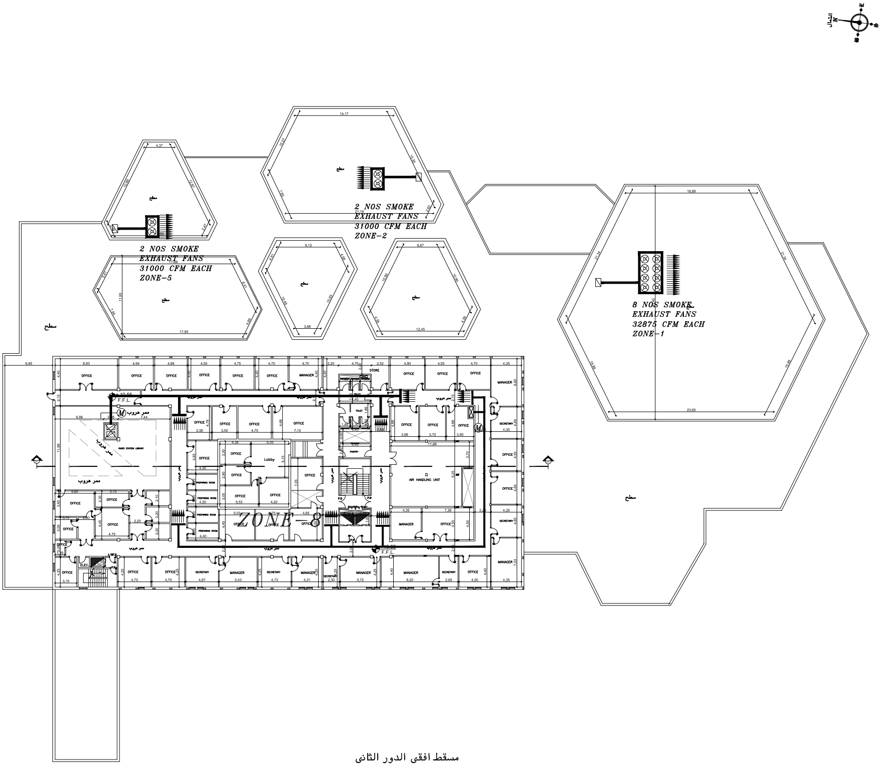
الشمال
2 NOS SMOKE
EXHAUST FANS
31000 CFM EACH
ZONE-5
2 NOS SMOKE
EXHAUST FANS
31000 CFM EACH
ZONE-2
8 NOS SMOKE
EXHAUST FANS
32875 CFM EACH
ZONE-1
ZONE-8
سطح
ممر هروب
OFFICE
MANAGER
SECRETARY
STORE
TOILT
PANTRY
Lobby
PREPARING ROOM
RADIO STATION LIBRARY
AIR HANDLING UNIT
ELEC.
10.65
F.F.L.
14,17
21,18
18,89
23,65
17,95
12,45

مسقط افقى الدور الثانى

SECOND FLOOR PLAN

SCALE ------ 1/200

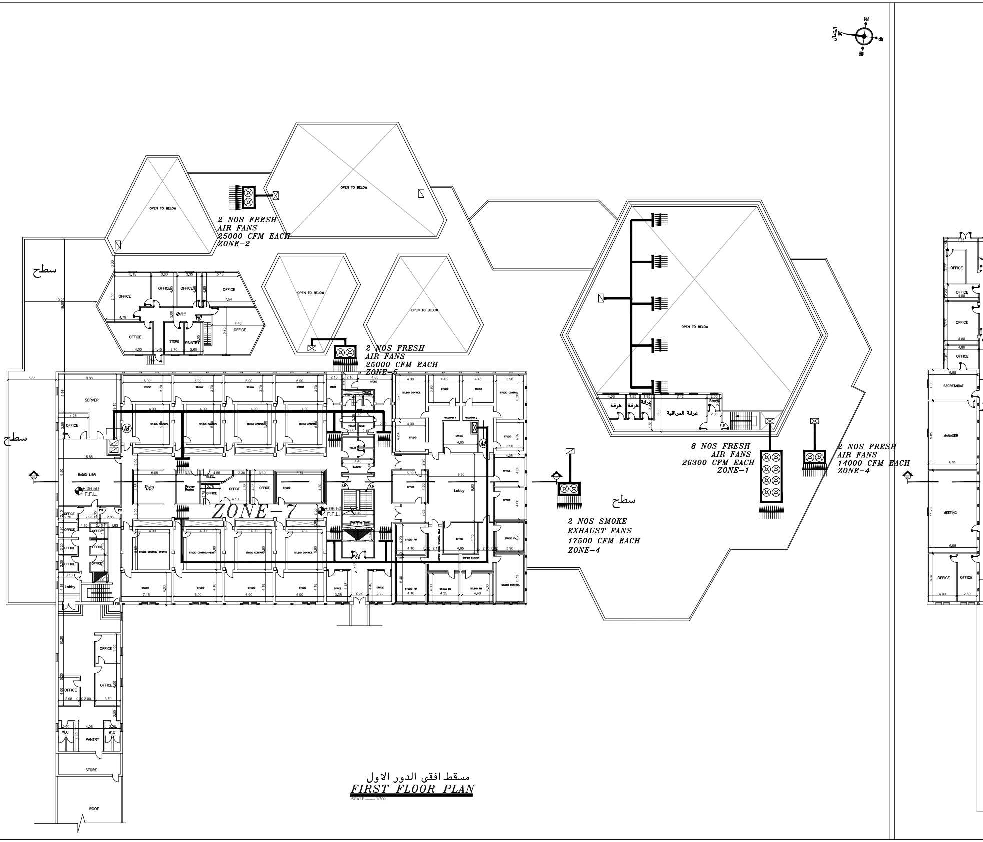
الشمال
N
2 NOS FRESH
AIR FANS
25000 CFM EACH
ZONE-2
OPEN TO BELOW
2 NOS FRESH
AIR FANS
25000 CFM EACH
ZONE-5
8 NOS FRESH
AIR FANS
26300 CFM EACH
ZONE-1
2 NOS FRESH
AIR FANS
14000 CFM EACH
ZONE-4
2 NOS SMOKE
EXHAUST FANS
17500 CFM EACH
ZONE-4
ZONE-7
سطح
غرفة
غرفة المراقبة
OFFICE
STORE
PAINTRY
SERVER
RADIO LIBR
+ 06.50
F.F.L.
Sitting Area
Prayer Room
ELEC.
STUDIO
STUDIO CONTROL
STUDIO CONTROL-SPORTS
STUDIO CONTROL-NEWS
STUDIO FM
PROGRAM 1
PROGRAM 2
SUPER STATION
Lobby
TOILET
PANTRY
W.C
ROOF
SECRETARIAT
MANAGER
MEETING
F.D
M

مسقط افقى الدور الاول

FIRST FLOOR PLAN

SCALE ------- 1/200

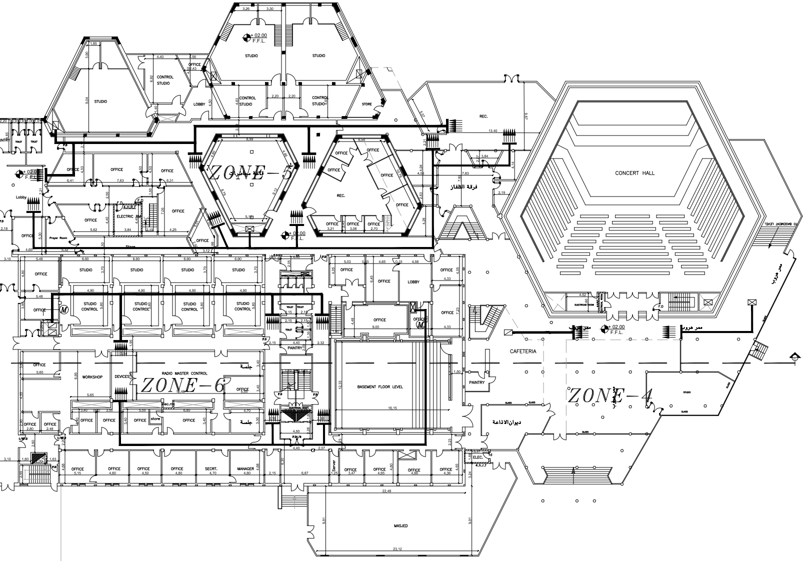
الشمال
STUDIO
CONTROL STUDIO
OFFICE
LOBBY
STORE
REC.
CONCERT HALL
ZONE-5
قاعة محاضرات
ZONE-6
ZONE-4
فرقة الطفل
ممر هروب
TO BASEMENT LEVEL
Lobby
Prayer Room
ELECTRIC RM
Store
STUDIO CONTROL
TOILET
PAINTRY
WORKSHOP
DEVICES
RADIO MASTER CONTROL
جلسة
store
elec.rm
ELECTRICAL SHAFT
BASEMENT FLOOR LEVEL
CAFETERIA
PAINTRY
ديوان الاذاعة
STUDIO
GLASS
ELECTRICAL ROOM
SECRT.
MANAGER
Server
ELEC.
MASJED
+ 02.00 F.F.L.
F.D
4.H.R.F

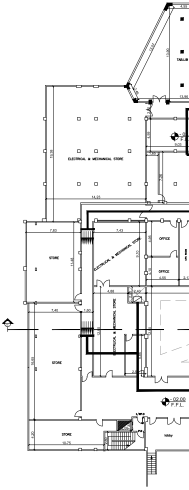
TAB.LIB
ELECTRICAL & MECHANICAL STORE
STORE
OFFICE
UPS ROOM
lobby
- 02.00 F.F.L.

مسقط افقى الدور الارضى

GROUND FLOOR PLAN

SCALE ------- 1/200

5

مبنى الاذاعة (الراديو)

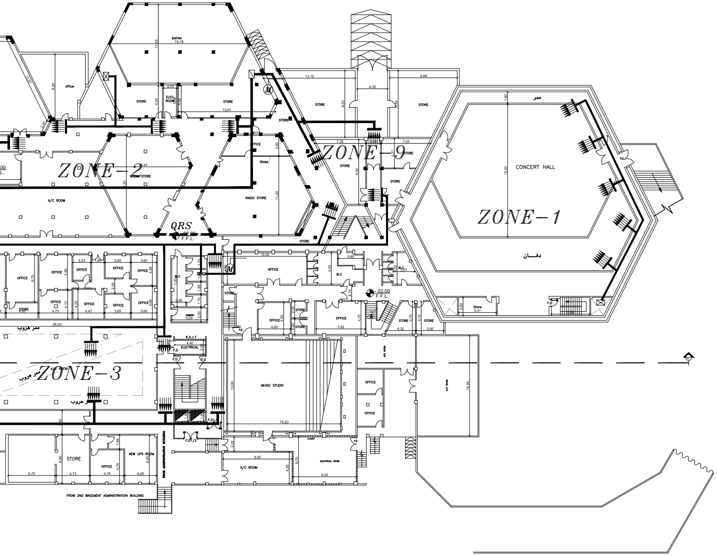
DAFAN
19.78
office
STORE
ELEC. ROOM
13.91
13.12
9.68
4.35
ممر
CONCERT HALL
18.95
ZONE−1
ZONE−2
ZONE−3
ZONE−9
QRS
-02.00
F.F.L.
A/C ROOM
RADIO STORE
Glass
OFFICE
W.C
دفان
Store
5.41
ممر هروب
28.53
ELECTRICAL
4.40
F.D
PANTRY
MUSIC STUDIO
13.00
16.20
UPS ROOM
A/C ROOM
14.35
NEW UPS ROOM
ELECTRICAL ROOM
9.90
9.05
FROM ADMINISTRATION BUILDING
FROM 2ND BASEMENT ADMINISTRATION BUILDING

مسقط افقى الدور السرداب

BASEMENT FLOOR PLAN

SCALE ------- 1/200

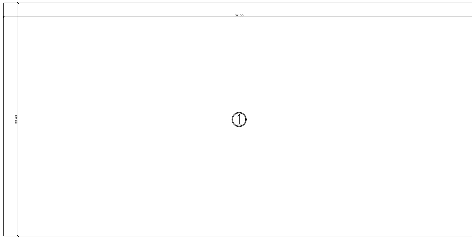

SECOND FLOOR AREA PLAN

1 = 67.55 X 33.43= 2258.2 m²

TOTAL	= 2258.2 m²

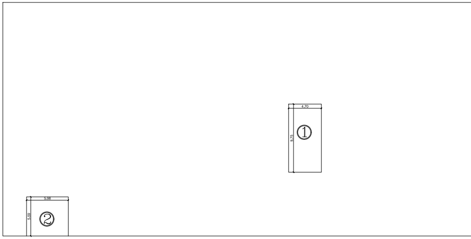
4.70
9.75
①
5.98
5.59
②

ROOF FLOOR AREA PLAN

1 = 4.70 X 9.75 = 45.83 m²

2= 5.98 X 5.59 = 33.43 m²

TOTAL	= 77.20 m²

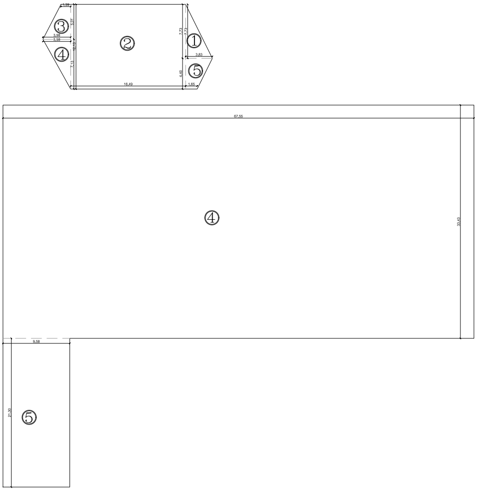
1.39
5.01
3.98
3.98
12.13
7.13
16.49
7.73
7.73
3.83
4.40
1.65
①
②
③
④
⑤
67.55
33.43
9.58
21.30
④
⑤

FIRST FLOOR AREA PLAN

1 =0.5X 3.83 X 7.73 = 14.80 m²
2= 12.13 X 16.49 = 200.02 m²
3= 0.5 X(1.39+3.98) X 5.01 = 13.45 m²
4 =0.5X 3.98 X 7.13 = 14.19 m²
5= 0.5 X(4.40+1.65) X 4.40 = 13.31 m²

TOTAL = 2716.53m²

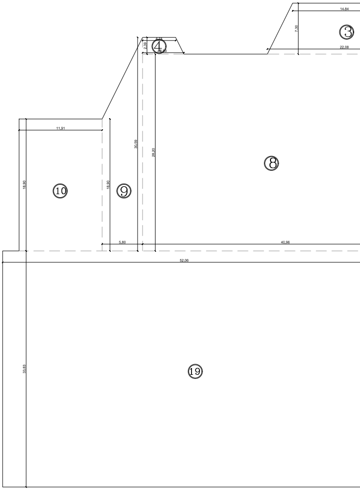
14.84
7.30
22.08
③
2.39
④
5.93
11.91
18.90
⑩
18.90
⑨
30.59
28.20
⑧
5.80
40.96
52.06
33.83
⑲

GROUND FLOOR AREA PLAN

1= 0.5 X(19.20+27.48)X 8.35 =194.89 m²
2= 0.5 X(3.02+8.89) X 11.85 = 70.57 m²
3= 0.5 X(14.84+22.08)X 7.30 =134.76 m²
4= 0.5 X(4.74+5.93) X 2.39 =12.75 m²
5= 0.5 X(5.19+10.66) X 11.02 = 87.33 m²
6= 0.5 X(10.66+8.24) X 4.87 = 46.02 m²
7= 14.37 X 51.41 = 738.76 m²
8= 40.96 X 28.20 = 1155.07 m²
9= 0.5 X(30.59+18.90)X 5.80 =143.52 m²
10= 11.91 X 18.90 = 225.10 m²
11= 0.5 X(70.73+59.57)X 22.50= 1465.88m²
12= 3.93 X 25.69 = 100.96 m²
13= 30.05 X 6.28 = 188.71 m²
14= 18.68 X 4.85 = 90.60 m²
15= 0.5 X(8.78+1.43) X 3.63 = 18.53 m²
16= 0.5 X(15.05+9.97) X 8.78 = 109.84 m²
17= 0.5 X(25.70+25.69)X 8.97 = 230.48 m²
18= 0.5 X(25.70+23.30)X 2.22 = 54.39 m²
19= 52.06 X 33.83 = 1761.19 m²
20= 0.5 X(27.48+28.24)X 1.52 = 42.35 m²
21= 0.5 X(3.33+4.46) X 2.27 = 8.84 m²

TOTAL = 6900.42m²

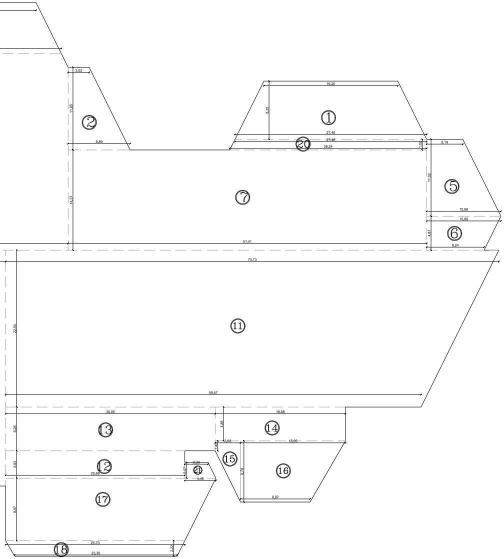
3,02
11,85
2
19,20
8,35
1
27,48
20
27,48
28,24
8,89
1,52
5,19
11,02
7
5
14,37
10,66
10,66
4,87
6
8,24
51,41
70,73
22,50
11
59,57
30,05
18,68
6,28
13
4,85
14
3,63
15,05
15
16
8,78
3,93
12
3,33
21
25,69
2,27
4,46
17
8,97
9,97
25,70
18
2,22
23,30

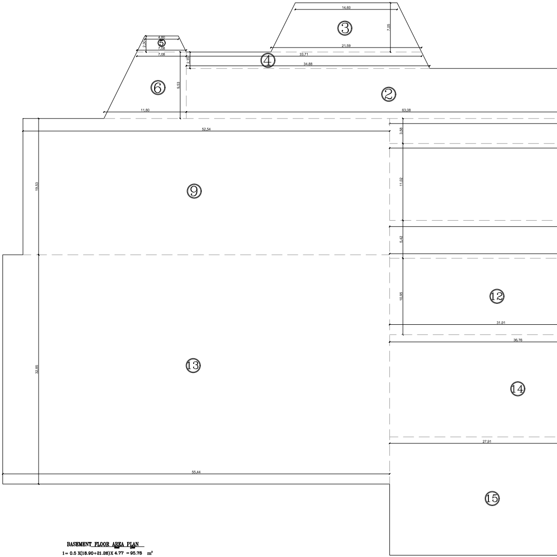
14,60
3
7,05
4,80
5
2,30
7,08
21,59
33,71
4
7,08
2,35
34,88
6
9,53
2
11,80
63,08
52,54
3,58
9
19,53
11,02
5,42
12
10,95
31,91
36,76
13
32,85
14
27,91
55,44
15

BASEMENT FLOOR AREA PLAN

1= 0.5 X(18.90+21.26)X 4.77 = 95.78 m^2
2= 63.08 X 07.17 = 452.28 m^2
3= 0.5 X(14.60+21.59)X 7.05 = 127.57 m^2
4= 0.5 X(33.71+34.88) X 2.35 = 80.59 m^2
5= 0.5 X(7.08+4.80) X 2.30 = 13.662 m^2
6= 0.5 X(7.08+11.80)X 9.53 = 89.96 m^2
7= 0.5 X(5.19+10.66)X 11.02= 87.33 m^2
8= 56.98 X 11.02 = 627.92 m^2
9= 52.54 X 19.53 = 1026.11 m^2
10= 0.5 X(67.63+64.94)X 5.42 = 359.27 m^2
11= 0.5 X(27.84+23.31) X 9.15 = 234.01 m^2
12= 10.95 X 31.91 = 349.42 m^2
13= 32.85 X 55.88 = 1835.67 m^2
14= 36.76 X 14.65 = 538.53 m^2
15= 27.91 X 16.95 = 473.08 m^2
16= 0.5 X(7.06+11.96)X 4.91= 46.69 m^2
17= 0.5 X(55.20+3.58)X 3.58= 105.22 m^2

TOTAL = 6624.82 m^2

⑤

مبنى الاذاعة (الراديو)

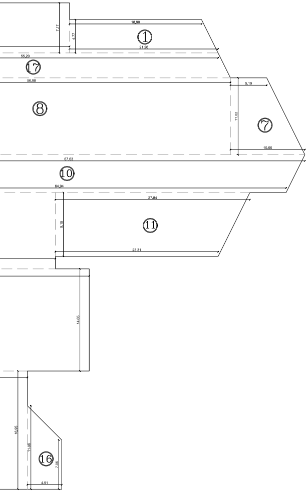
18.90
7.17
4.77
①
21.26
55.20
⑰
56.98
5.19
⑧
11.02
⑦
10.66
67.63
⑩
64.94
27.84
9.15
⑪
23.31
14.65
16.95
11.96
⑯
7.06
4.91

FLOOR NAME	FLOOR NO.	AREA OF THE EACH FLOOR	TOTAL
1ST BASEMENT FLOOR	01	6624.82 M2	6624.82 M2
GROUND FLOOR	01	6900.42 M2	6900.42 M2
FIRST FLOOR	01	2716.53 M2	2716.53 M2
SECOND FLOOR	01	2258.2 M2	2258.2 M2
ROOF FLOOR	01	77.20 M2	77.20 M2
GRAND TOTAL			18577.17 M2